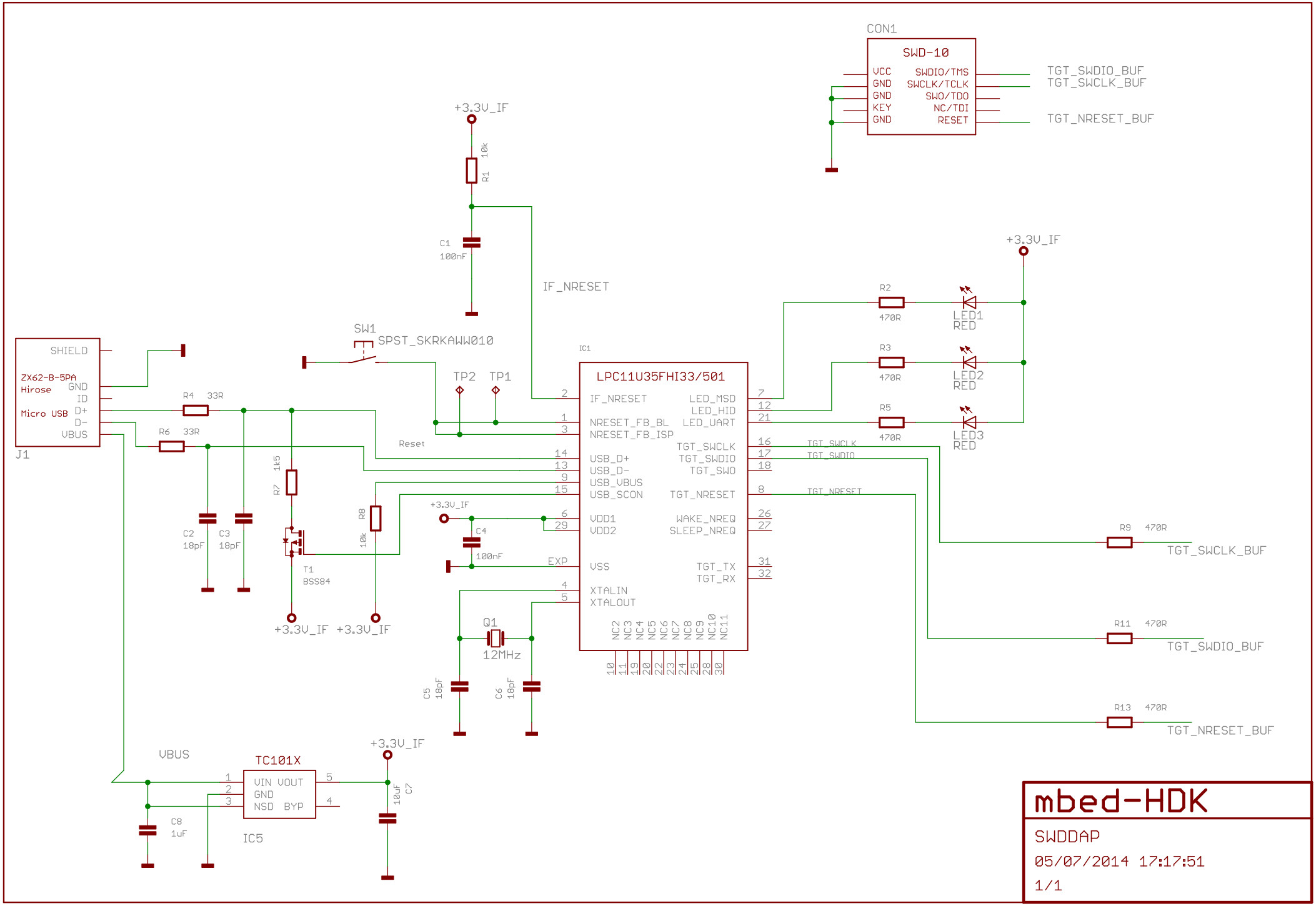
CON1
SWD-10
VCC
GND
GND
KEY
GND
SWDIO/TMS
SWCLK/TCLK
SWO/TDO
NC/TDI
RESET
TGT_SWDIO_BUF
TGT_SWCLK_BUF
TGT_NRESET_BUF
+3.3V_IF
R1 10k
C1 100nF
IF_NRESET
SW1
SPST_SKRKAWW010
IC1
LPC11U35FHI33/501
IF_NRESET
NRESET_FB_BL
NRESET_FB_ISP
USB_D+
USB_D-
USB_VBUS
USB_SCON
VDD1
VDD2
VSS
XTALIN
XTALOUT
LED_MSD
LED_HID
LED_UART
TGT_SWCLK
TGT_SWDIO
TGT_SWO
TGT_NRESET
WAKE_NREQ
SLEEP_NREQ
TGT_TX
TGT_RX
NC2 NC3 NC4 NC5 NC6 NC7 NC8 NC9 NC10 NC11
TP2
TP1
Reset
EXP
C4 100nF
Q1
12MHz
C5 18pF
C6 18pF
R2 470R
R3 470R
R5 470R
LED1 RED
LED2 RED
LED3 RED
R9 470R
R11 470R
R13 470R
TGT_SWCLK_BUF
TGT_SWDIO_BUF
TGT_NRESET_BUF
SHIELD
ZX62-B-5PA
Hirose
Micro USB
GND
ID
D+
D-
VBUS
J1
R4 33R
R6 33R
R7 1k5
R8 10k
C2 18pF
C3 18pF
T1
BSS84
VBUS
TC101X
VIN VOUT
GND
NSD BYP
IC5
C8 1uF
C7 10uF
mbed-HDK
SWDDAP
05/07/2014 17:17:51
1/1