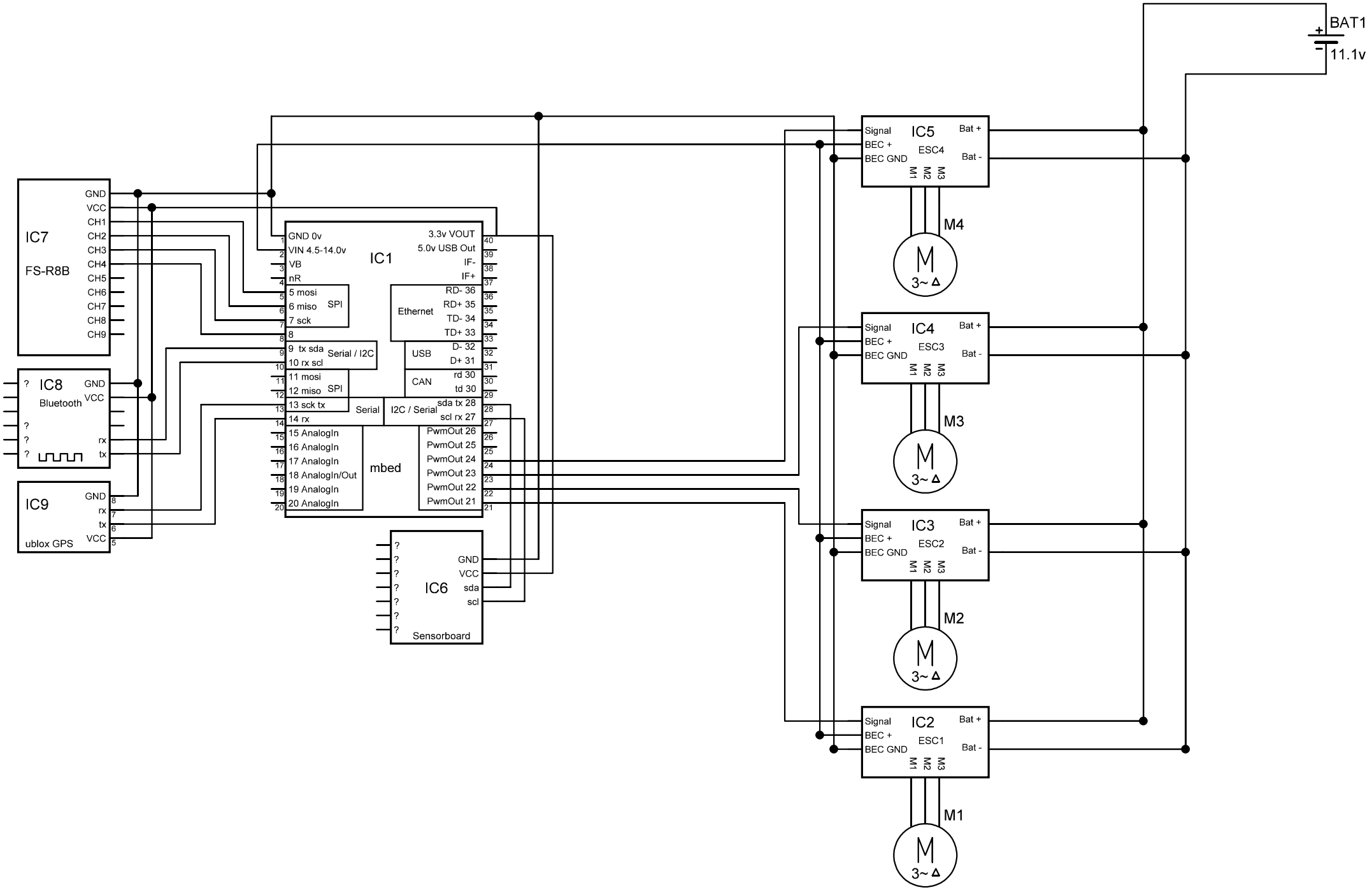
BAT1
11.1v
IC7
FS-R8B
GND
VCC
CH1
CH2
CH3
CH4
CH5
CH6
CH7
CH8
CH9
IC8
Bluetooth
GND
VCC
rx
tx
IC9
ublox GPS
GND
rx
tx
VCC
IC1
mbed
GND 0v
VIN 4.5-14.0v
VB
nR
5 mosi
6 miso
7 sck
SPI
9 tx sda
10 rx scl
Serial / I2C
11 mosi
12 miso
13 sck tx
14 rx
Serial
15 AnalogIn
16 AnalogIn
17 AnalogIn
18 AnalogIn/Out
19 AnalogIn
20 AnalogIn
3.3v VOUT
5.0v USB Out
IF-
IF+
Ethernet
RD- 36
RD+ 35
TD- 34
TD+ 33
USB
D- 32
D+ 31
CAN
rd 30
td 30
I2C / Serial
sda tx 28
scl rx 27
PwmOut 26
PwmOut 25
PwmOut 24
PwmOut 23
PwmOut 22
PwmOut 21
IC6
Sensorboard
GND
VCC
sda
scl
IC5
ESC4
IC4
ESC3
IC3
ESC2
IC2
ESC1
Signal
BEC +
BEC GND
Bat +
Bat -
M1
M2
M3
M4
3~ Δ