Overview

HANI-IoT is a low-power development board for IoT applications, featuring a multi-protocol wireless module, several motion and environmental sensors, an on-board programmer and USB interfaces.

Revision History

R0.1
- Project created

R1.0
- Prototype release

R1.1
- Changeb BLE module
- Added J19 for power selection
- Minor fixes

Manufacturing / Mechanical

ARROW ELECTRONICS, INC

ANALOG DEVICES

NXP

RELOC DESIGN & INTEGRATION

FM1 FM2 FM3 FM4 FM5 FM6

Title: HANI IoT Section: Overview		
Size: A4	Project code: PCBR18P11	Revision: 1.1
Date: 17/04/2019	Time: 18:55:02	Sheet 1 of 12
File: 01_Overview.SchDoc		

RELOC
RELOC s.r.l.
Str. Langhirano, 264/3A
43124 - Parma
Italy (www.reloc.it)
PIVA IT02510020346

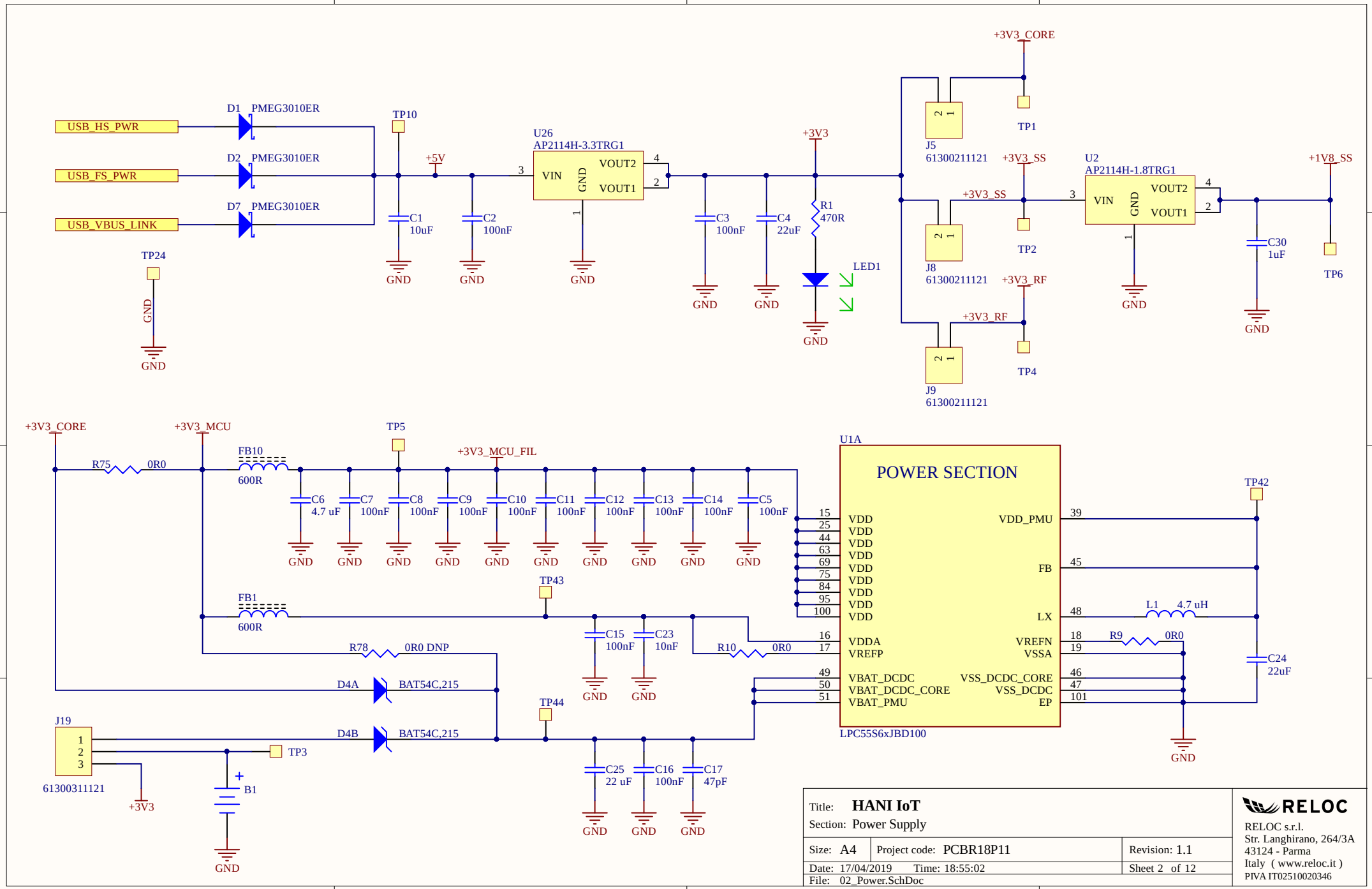

Title: **HANI IoT**
Section: Power Supply

Size: A4	Project code: PCBR18P11	Revision: 1.1
Date: 17/04/2019	Time: 18:55:02	Sheet 2 of 12
File: 02_Power.SchDoc		

RELOC
RELOC s.r.l.
Str. Langhirano, 264/3A
43124 - Parma
Italy (www.reloc.it)
PIVA IT02510020346

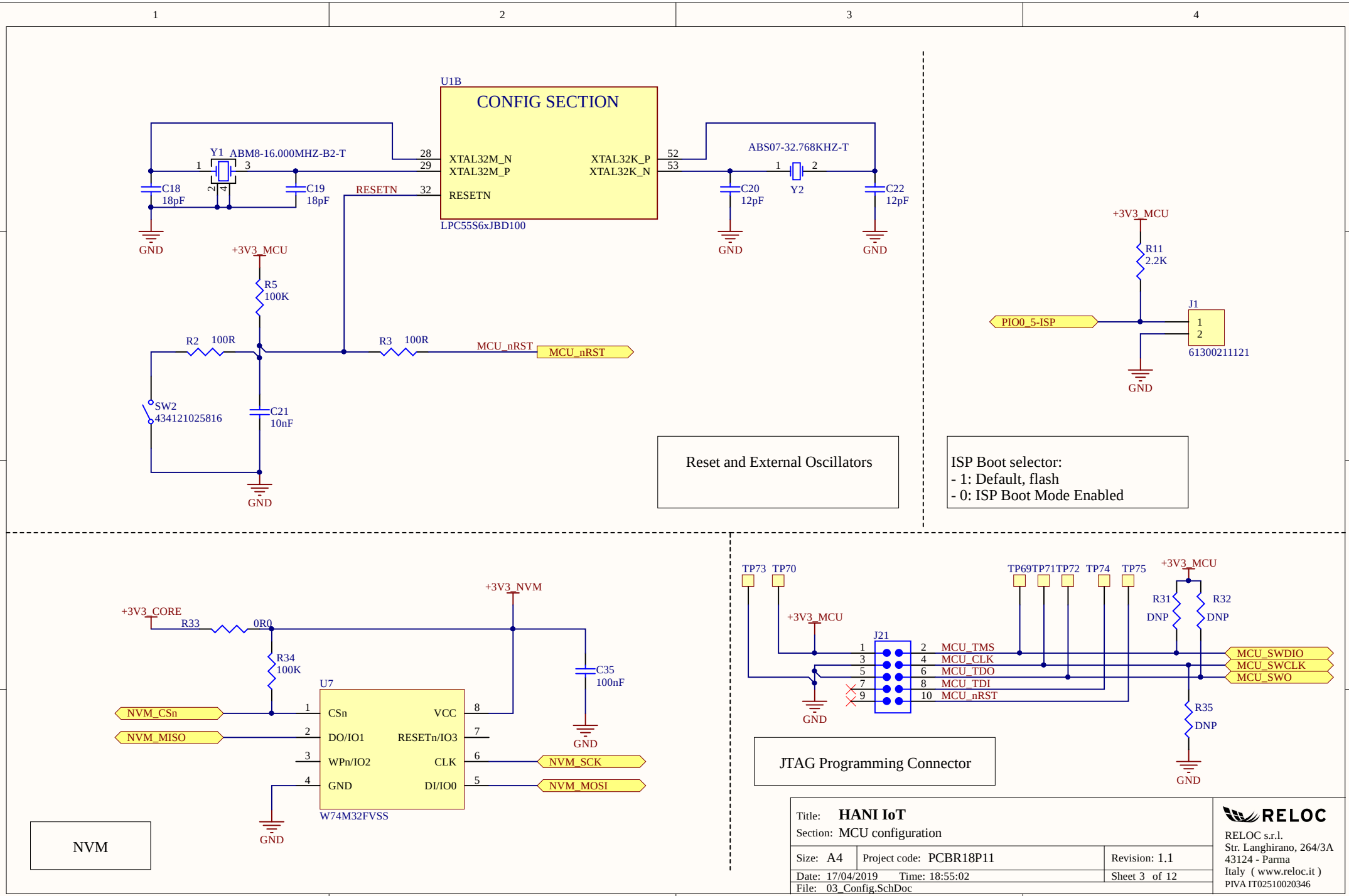

Title: **HANI IoT**
Section: MCU configuration

Size: A4	Project code: PCBR18P11	Revision: 1.1
Date: 17/04/2019 Time: 18:55:02		Sheet 3 of 12
File: 03_Config.SchDoc		

RELOC
RELOC s.r.l.
Str. Langhirano, 264/3A
43124 - Parma
Italy (www.reloc.it)
PIVA IT02510020346

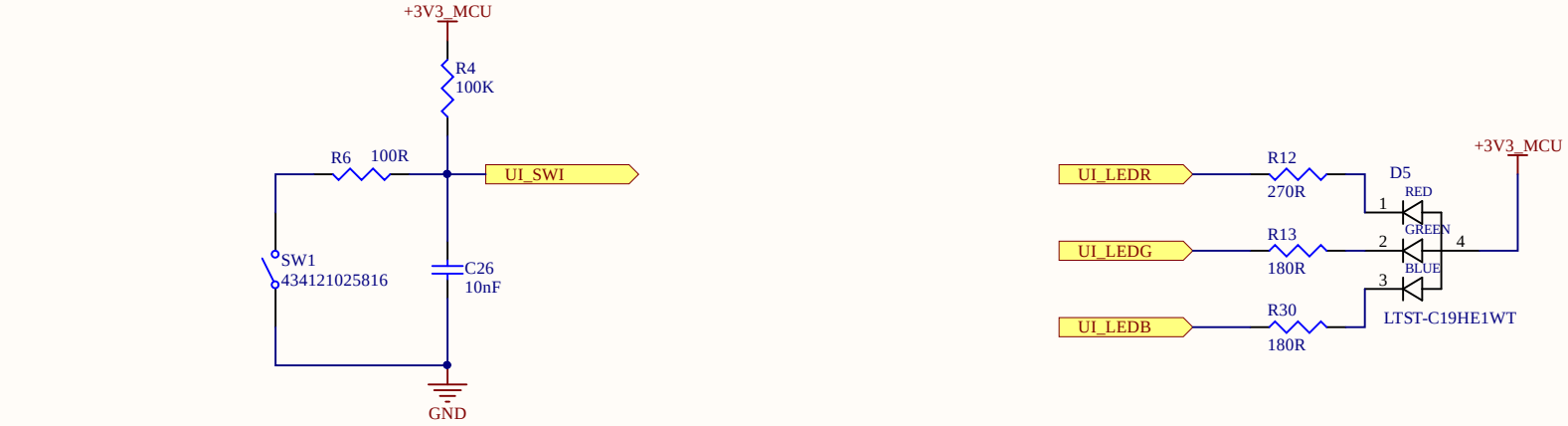

User Interface

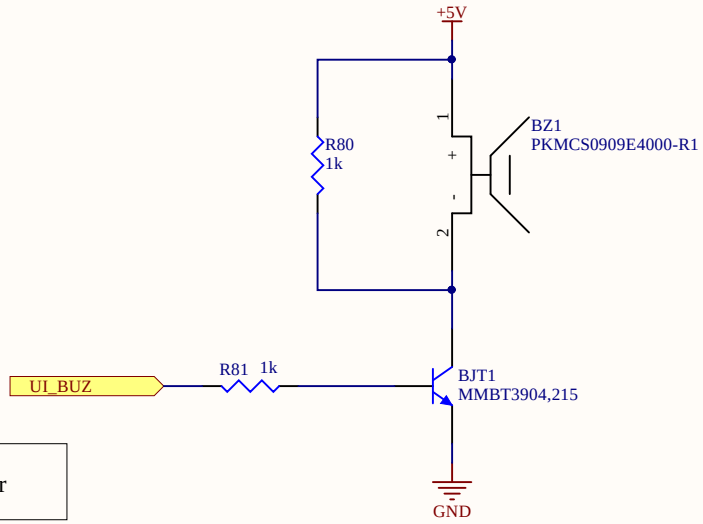

Buzzer

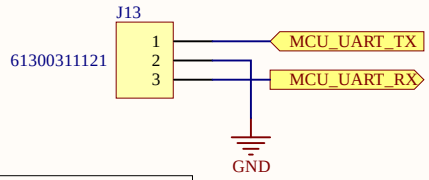

Debug Serial Connector
(MCU Usart FC0 Interface)

Title: **HANI IoT** Section: UI		
Size: A4	Project code: PCBR18P11	Revision: 1.1
Date: 17/04/2019	Time: 18:55:03	Sheet 4 of 12
File: 04_UI.SchDoc		

RELOC
RELOC s.r.l.
Str. Langhirano, 264/3A
43124 - Parma
Italy (www.reloc.it)
PIVA IT02510020346

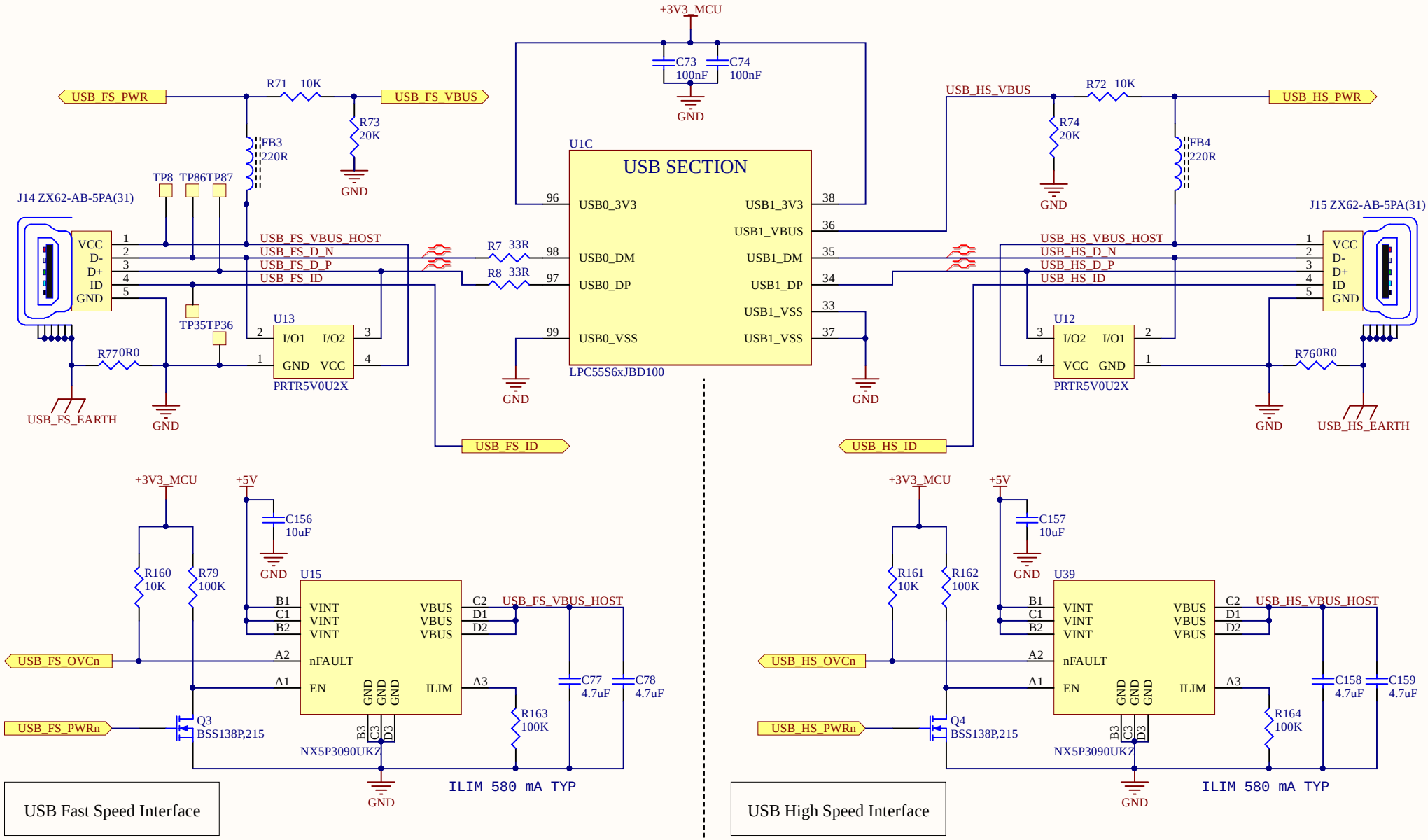

Title: **HANI IoT**
Section: USB

Size: A4	Project code: PCBR18P11	Revision: 1.1
Date: 17/04/2019	Time: 18:55:03	Sheet 5 of 12
File: 05_USB.SchDoc		

RELOC
RELOC s.r.l.
Str. Langhirano, 264/3A
43124 - Parma
Italy (www.reloc.it)
PIVA IT02510020346

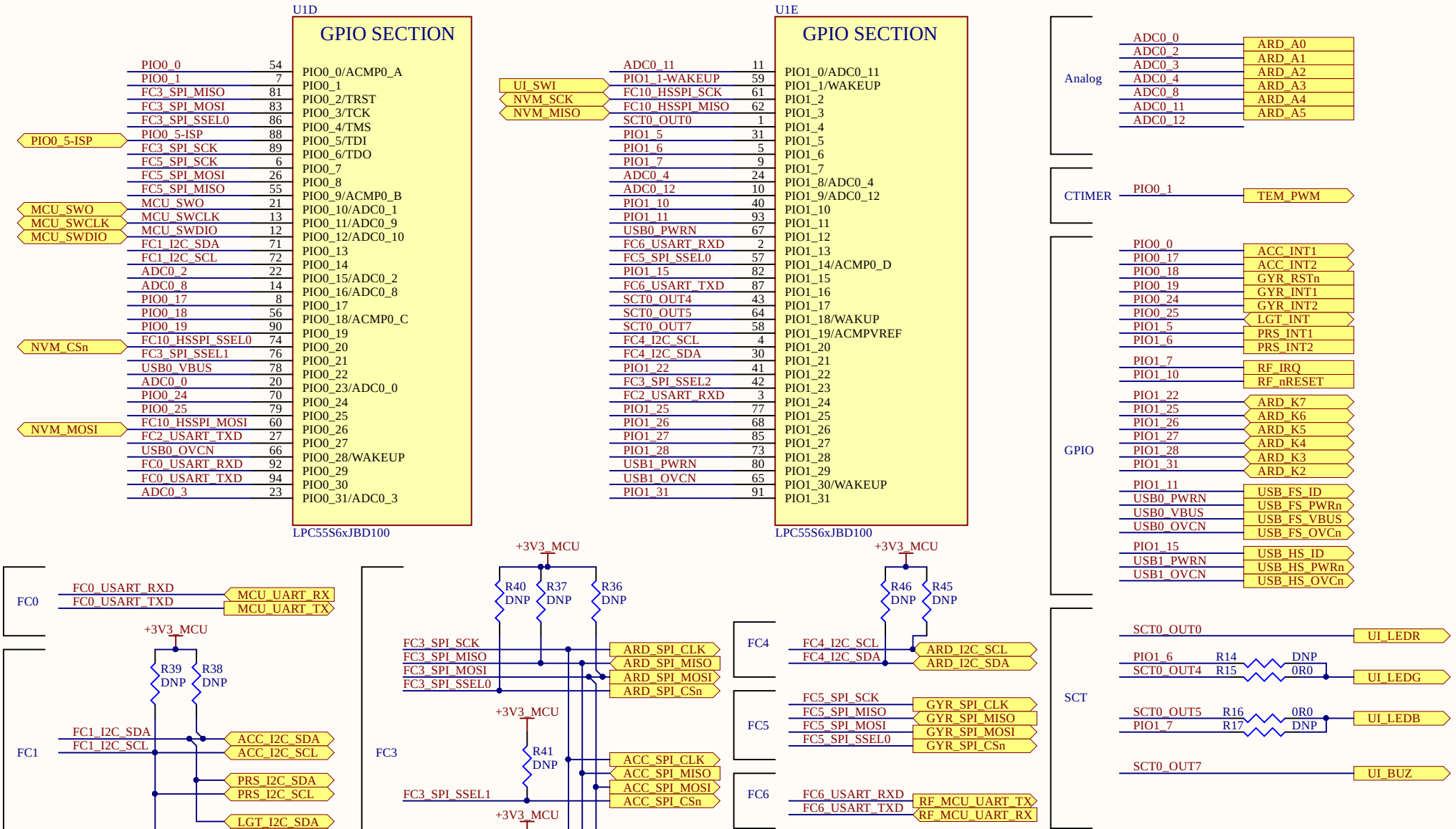

Title: **HANI IoT**
Section: PORTS

Size: A4	Project code: PCBR18P11	Revision: 1.1
Date: 17/04/2019	Time: 18:55:03	Sheet 6 of 12
File: 06_Ports.SchDoc		

RELOC
RELOC s.r.l.
Str. Langhirano, 264/3A
43124 - Parma
Italy (www.reloc.it)
PIVA IT02510020346

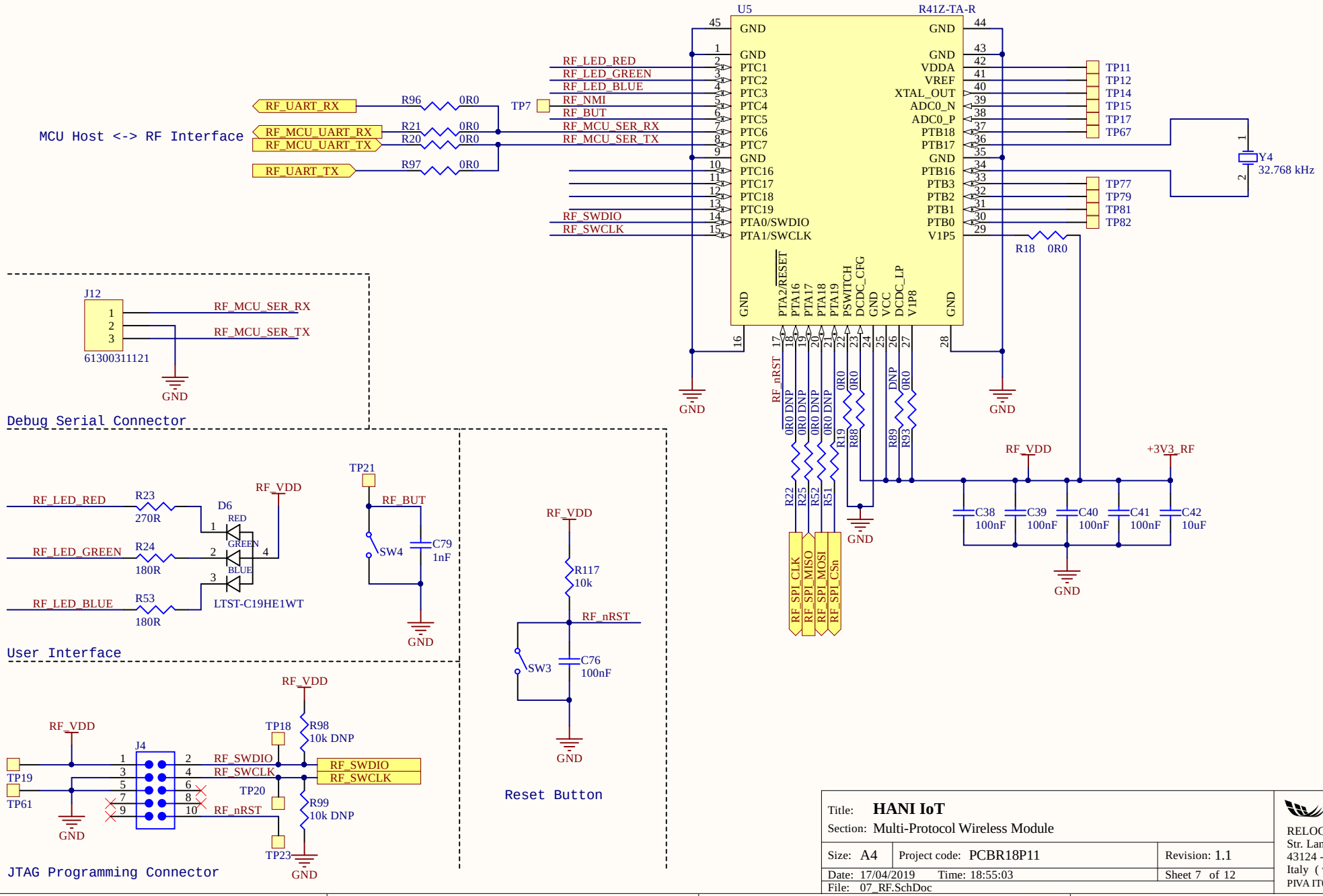

Title: **HANI IoT**

Section: Multi-Protocol Wireless Module

Size: A4	Project code: PCBR18P11	Revision: 1.1
Date: 17/04/2019	Time: 18:55:03	Sheet 7 of 12
File: 07_RF.SchDoc		

RELOC

RELOC s.r.l.
Str. Langhirano, 264/3A
43124 - Parma
Italy (www.reloc.it)
PIVA IT02510020346

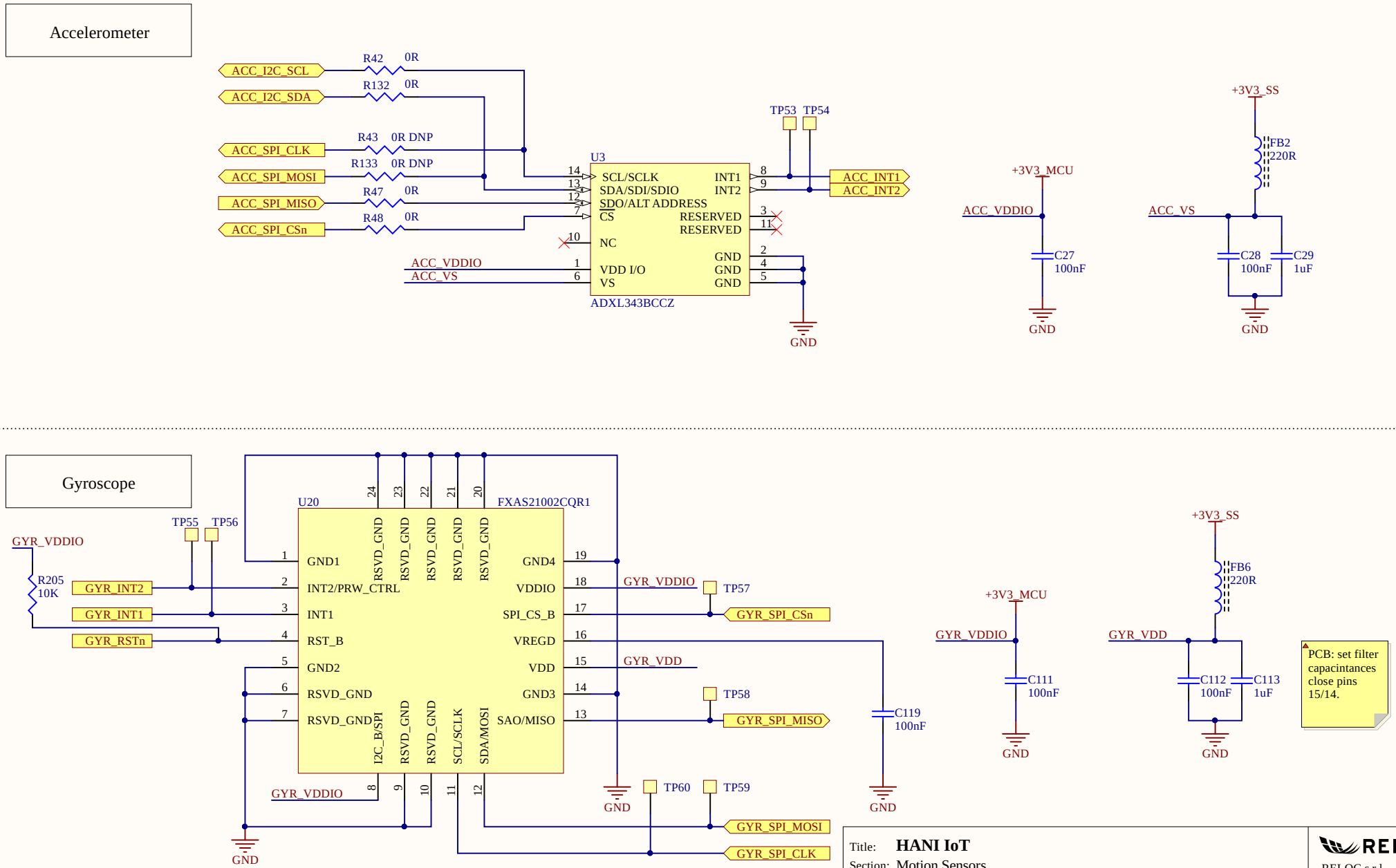
Accelerometer
ACC_I2C_SCL
ACC_I2C_SDA
ACC_SPI_CLK
ACC_SPI_MOSI
ACC_SPI_MISO
ACC_SPI_CSn
R42 0R
R132 0R
R43 0R DNP
R133 0R DNP
R47 0R
R48 0R
U3
SCL/SCLK
SDA/SDI/SDIO
SDO/ALT ADDRESS
CS
NC
VDD I/O
VS
INT1
INT2
RESERVED
RESERVED
GND
GND
GND
ADXL343BCCZ
ACC_VDDIO
ACC_VS
TP53 TP54
ACC_INT1
ACC_INT2
GND
+3V3_MCU
ACC_VDDIO
C27
100nF
GND
+3V3_SS
FB2
220R
ACC_VS
C28
100nF
C29
1uF
GND
Gyroscope
U20
FXAS21002CQR1
GND1
INT2/PRW_CTRL
INT1
RST_B
GND2
RSVD_GND
RSVD_GND
GND4
VDDIO
SPI_CS_B
VREGD
VDD
GND3
SAO/MISO
RSVD_GND
RSVD_GND
I2C_B/SPI
SCL/SCLK
SDA/MOSI
GYR_VDDIO
R205
10K
GYR_INT2
GYR_INT1
GYR_RSTn
TP55 TP56
GYR_VDDIO
TP57
GYR_SPI_CSn
GYR_VDD
TP58
GYR_SPI_MISO
C119
100nF
TP60 TP59
GYR_SPI_MOSI
GYR_SPI_CLK
GND
GND
GND
GND
+3V3_MCU
GYR_VDDIO
C111
100nF
GND
+3V3_SS
FB6
220R
GYR_VDD
C112
100nF
C113
1uF
GND
PCB: set filter capacitances close pins 15/14.
Title: HANI IoT
Section: Motion Sensors
Size: A4
Project code: PCBR18P11
Revision: 1.1
Date: 17/04/2019
Time: 18:55:03
Sheet 8 of 12
File: 08_Sensors_Motion.SchDoc
RELOC
RELOC s.r.l.
Str. Langhirano, 264/3A
43124 - Parma
Italy (www.reloc.it)
PIVA IT02510020346

Light Sensor

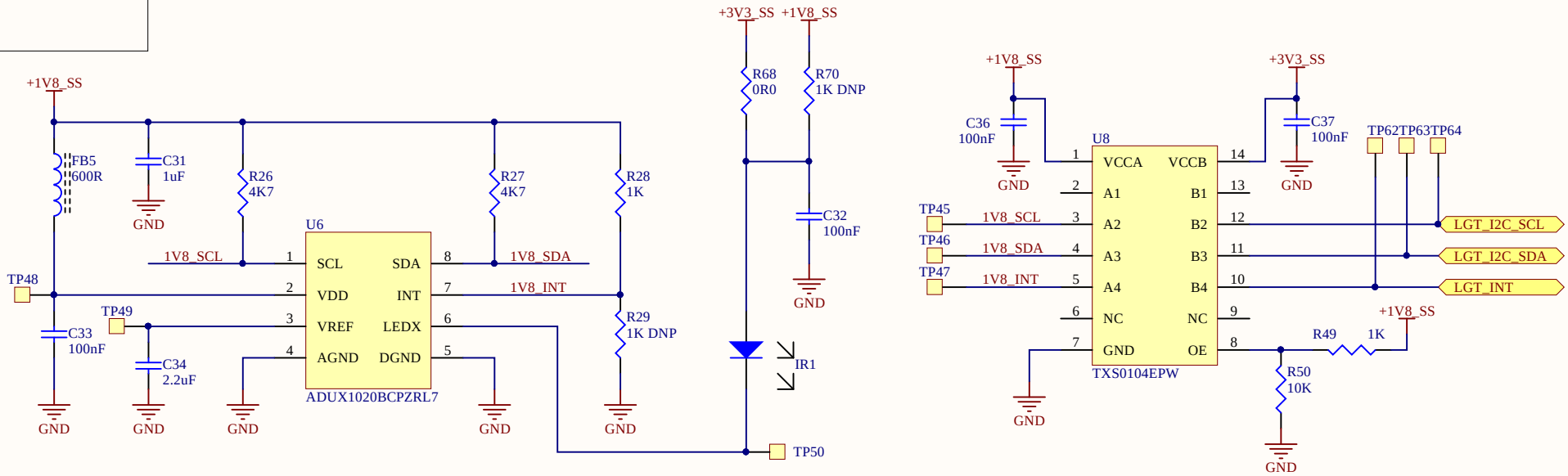

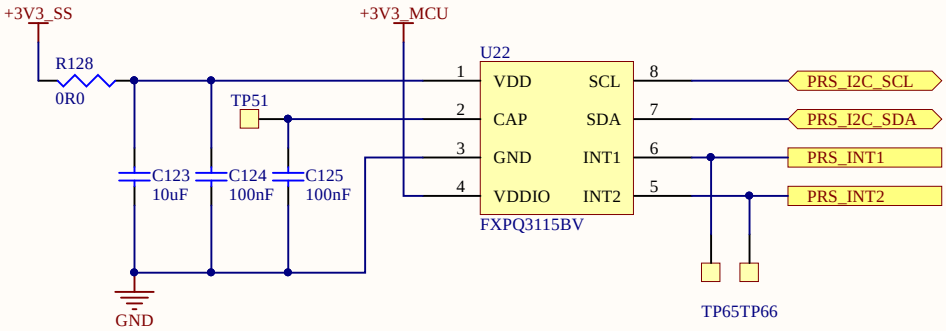

P Sensor
(I2C ADDR = 0x60)

Temperature Sensor

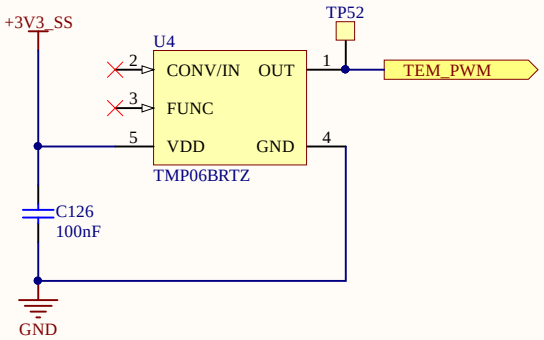

Title: **HANI IoT**		
Section: Environment Sensors		
Size: A4	Project code: PCBR18P11	Revision: 1.1
Date: 17/04/2019 Time: 18:55:03		Sheet 9 of 12
File: 09_Sensors_Environment.SchDoc		

RELOC
RELOC s.r.l.
Str. Langhirano, 264/3A
43124 - Parma
Italy (www.reloc.it)
PIVA IT02510020346

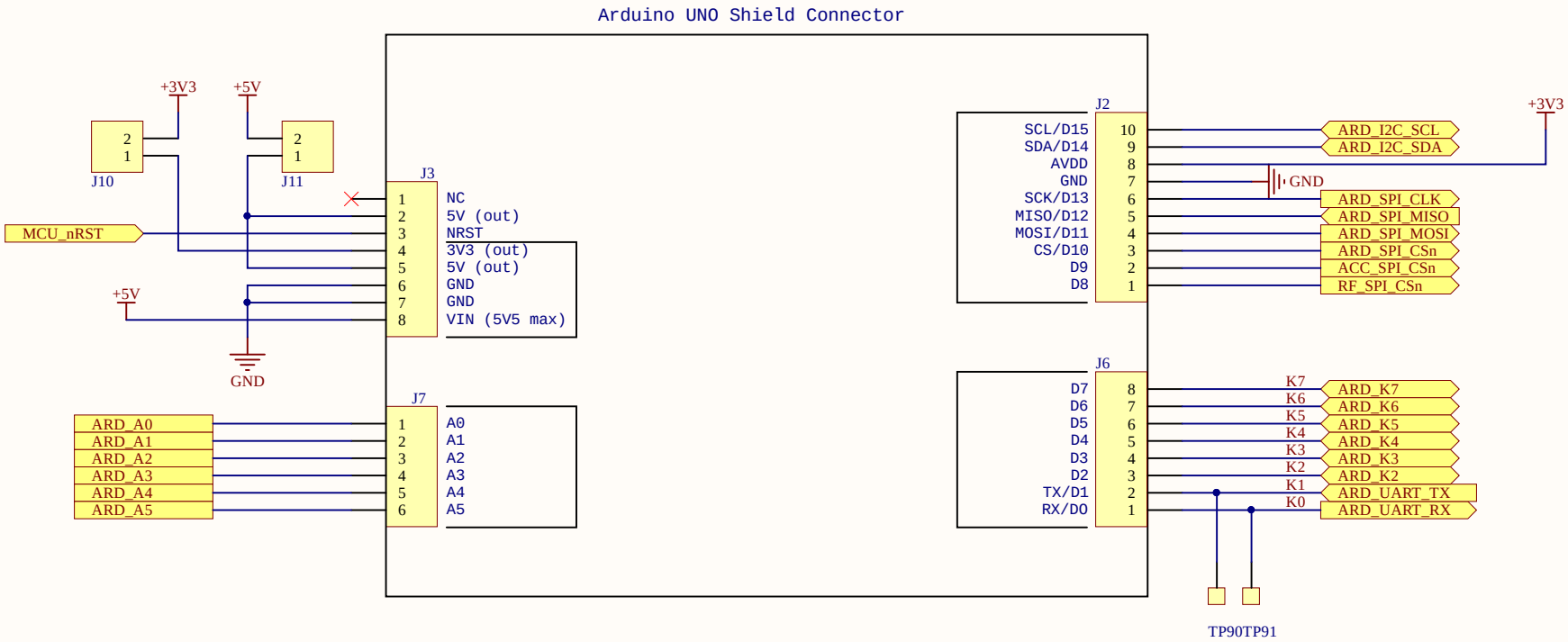

Title: **HANI IoT**		
Section: Connectors		
Size: A4	Project code: PCBR18P11	Revision: 1.1
Date: 17/04/2019 Time: 18:55:04		Sheet 10 of 12
File: 10_Connectors.SchDoc		

RELOC
RELOC s.r.l.
Str. Langhirano, 264/3A
43124 - Parma
Italy (www.reloc.it)
PIVA IT02510020346

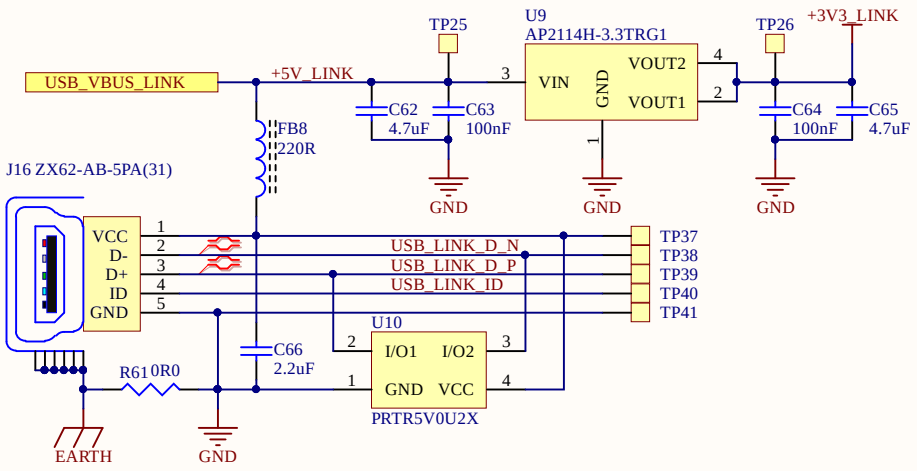

USB Interface

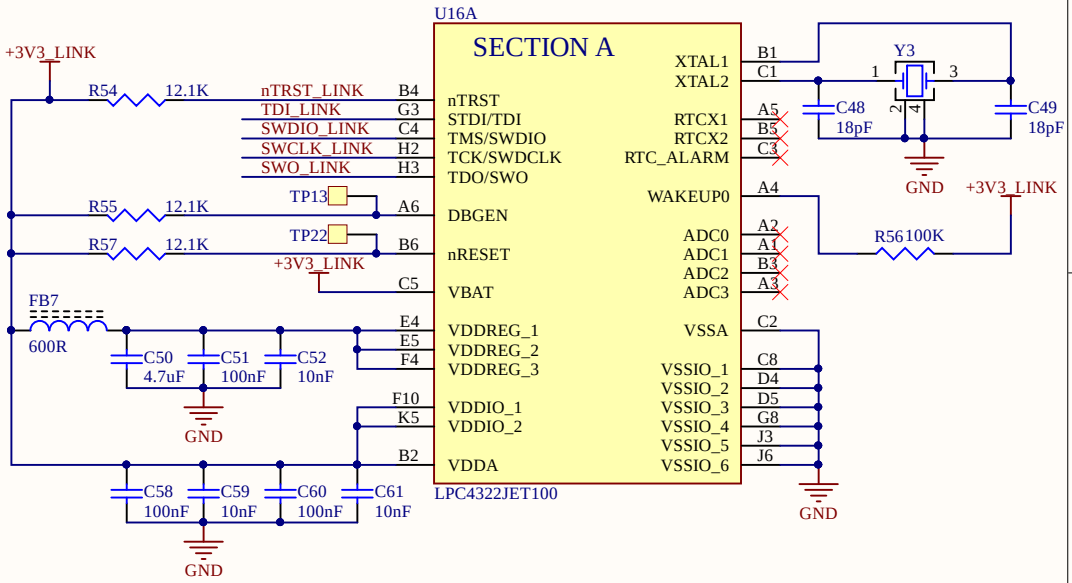

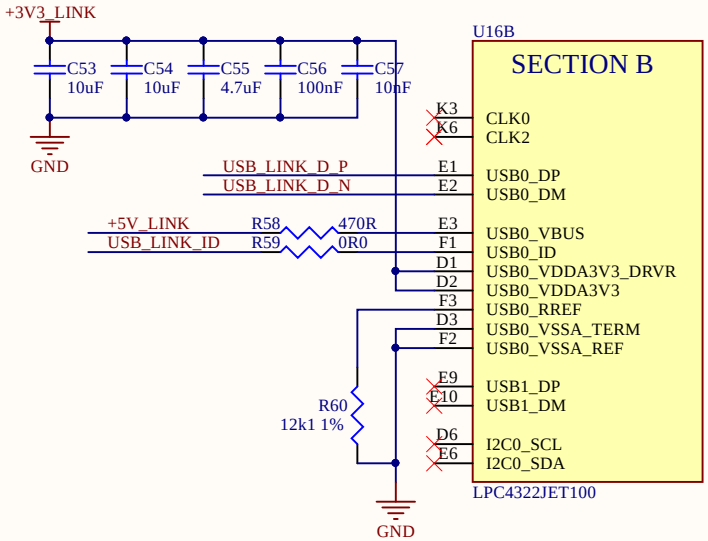

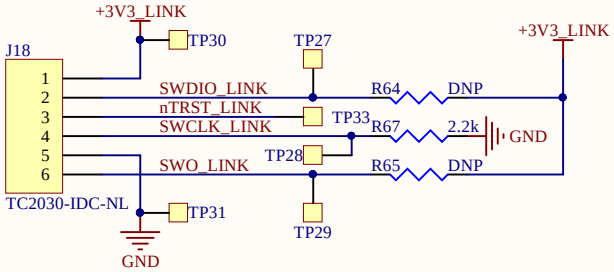

JTAG Programming Connector

Title: **HANI IoT**		
Section: Debug		
Size: A4	Project code: PCBR18P11	Revision: 1.1
Date: 17/04/2019	Time: 18:55:04	Sheet 11 of 12
File: 11_Debug1.SchDoc		

RELOC
RELOC s.r.l.
Str. Langhirano, 264/3A
43124 - Parma
Italy (www.reloc.it)
PIVA IT02510020346

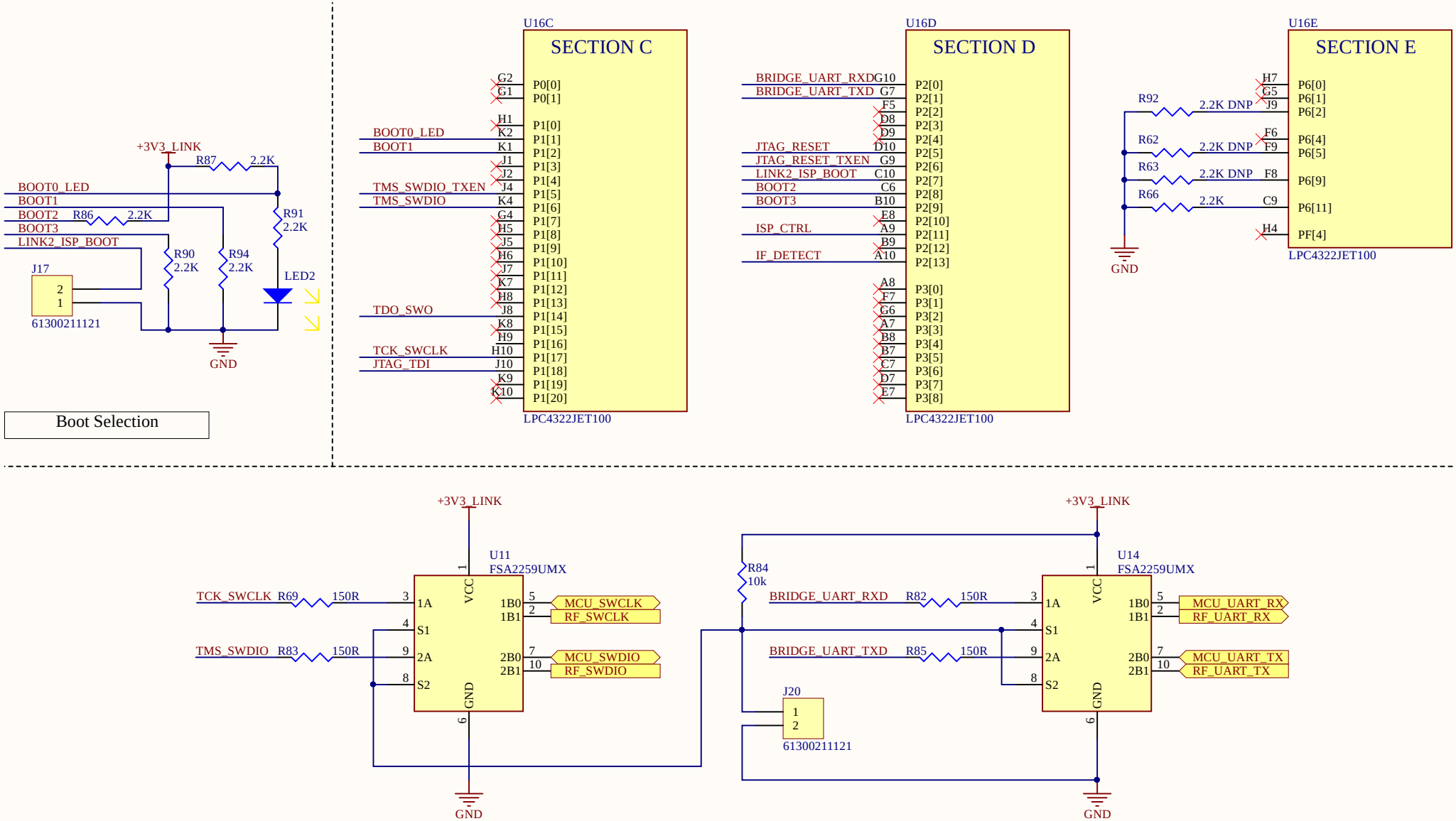

Selection of Host Programming Interface:

- No jumper: RF module selected.
- Jumpered (default): LPC55S69 selected.

Title: **HANI IoT**		
Section: Debug		
Size: A4	Project code: PCBR18P11	Revision: 1.1
Date: 17/04/2019	Time: 18:55:04	Sheet 12 of 12
File: 12_Debug2.SchDoc		

RELOC
RELOC s.r.l.
Str. Langhirano, 264/3A
43124 - Parma
Italy (www.reloc.it)
PIVA IT02510020346